APPENDIX E

STANDARD DRAWINGS

LIST OF DRAWINGS

Drawing Title

EC-01	Sediment Basin (2 sheets)
EC-02	Sediment Trap (2 sheets)
EC-04	Reinforced Silt Fence (3 sheets)
EC-05	Rock Ditch Check (2 sheets)
EC-06	Stabilized Construction Entrance (3 sheets)
EC-07	Excavated Drop Inlet Protection (2 sheets)
EC-08	Block and Gravel Drop Inlet Sediment Trap (2 sheets)
EC-09	Gravel and Wire Mesh Drop Inlet Protection (2 sheets)
EC-10	Block and Gravel Curb Inlet Protection
EC-11	Gravel Curb Inlet Protection with Sediment Filter
EC-12	Curb Inlet Protection with Wooden Weir
EC-13	Rock Sediment Dike (3 sheets)
EC-14	Pipe Slope Drain (2 sheets)
EC-15	Temporary Stream Low Water Crossing (3 sheets)
EC-16	Diversion Dike or Berm (2 sheets)
EC-17	Diversion Swale (2 sheets)
EC-18	Sandbags
EC-19	Inlet protection socks
EC-20	Sock fence
EC-21	Filter Fabric
EC-22	Sediment Tube Check (2 sheets)
SD-01	Anti Vortex
SD-02	Pipe Channel Outlet (2 sheets)
WQ-01	Wet Detention Pond (2 sheets)
WQ-02	Wet Extended Detention Pond (2 sheets)
WQ-03	Micropool Extended Detention Pond (2 sheets)
WQ-04	Storm Water Wetland (2 sheets)
WQ-05	Shallow Wetland (2 sheets)
WQ-06	Extended Detention Shallow Wetland (2 sheets)
WQ-07	Pond/Wetland System (2 sheets)

WQ-08	Pocket Wetland (2 sheets)
WQ-09	Typical Bioretention Area (4 sheets)
WQ-10	Underground Sand Filter (2 sheets)
WQ-11	Infiltration Trench (2 sheets)
WQ-12	Enhances Dry Swale (2 sheets)
WQ-13	LID Parking Lot
WQ-14	BMP Standard Notes
WQ-15	Dry Detention Pond (2 sheets)
WQ-16	Concrete Truck Washout

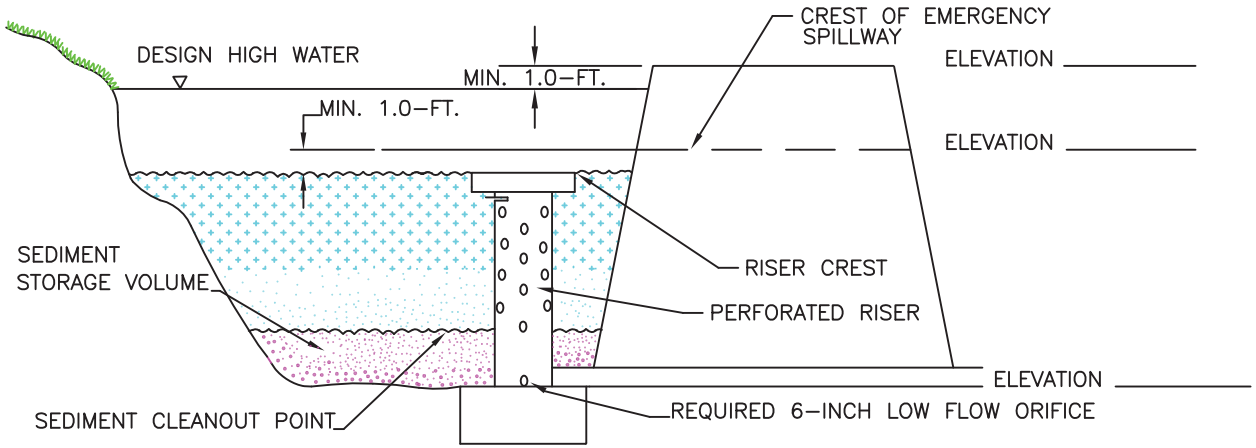

DESIGN ELEVATIONS WITH REQUIRED EMERGENCY SPILLWAY

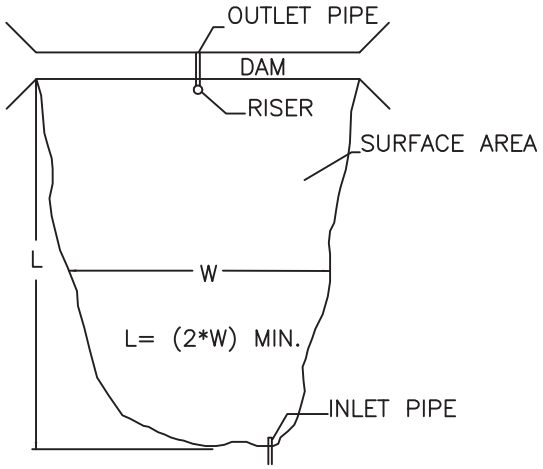

PLAN VIEW

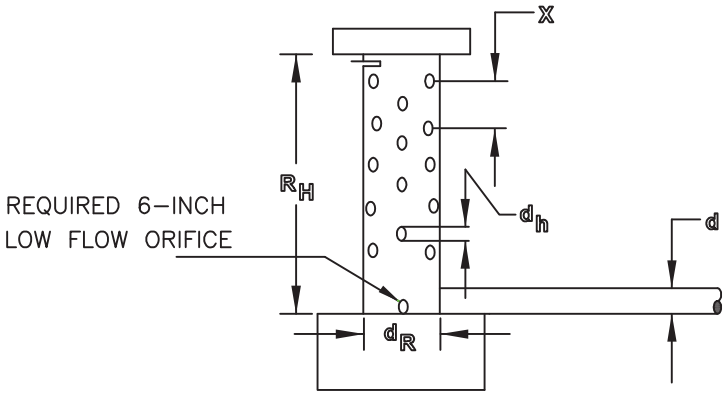

R_H = RISER HEIGHT _____

d_R = RISER DIAMETER _____

d_h = ORIFICE DIAMETER _____

X = ORIFICE SPACING _____

d = OUTLET PIPE DIAMETER _____

RISER PIPE DETAIL

Fort Jackson
Land Disturbance Handbook

SEDIMENT BASIN

STANDARD DRAWING NO. EC–01 Page 1 of 2

SEDIMENT BASIN

When and Where to Use It

Sediment Basins should not be placed in waters of the State or USGS blue–line streams (unless approved by Fort Jackson, State, or Federal authorities).

Inspection and Maintenance:

The key to a functional sediment basin is continual monitoring, regular maintenance and regular sediment removal.

The length to width ration should be followeed. Baffles created from berms or silt fences should be used to obtain a L:W ratio of at least 2.

Attention to sediment accumulations within the pond is extremely important. Sediment deposition should be continually monitored in the basin. Owners and maintenance authorities should be aware that significant concentrations of heavy metals (e.g., lead, zinc, and cadmium) as well as some organics such as pesticides, may be expected to accumulate at the bottom of these treatment facilities.

Remove sediment when it reaches 50% of storage volume or top of the cleanout stake.

Since decomposing vegetation can release pollutants, especially nutrients, captured in the wetpond, it may be necessary to harvest dead vegetation annually. Otherwise the decaying vegetation can export pollutants out of the pond and can cause nuisance conditions to occur.

Regular inspections should be done every seven (7) calendar days and within 24–hours after each rainfall event that produces ½–inches or more of precipitation.

All temporary sediment basins should be removed within 30 days after final site stabilization is achieved or after it is no longer needed.

Trapped sediment should be removed from, or stabilized on site.

Disturbed areas resulting from the removal of the sediment basin should be permanently stabilized.

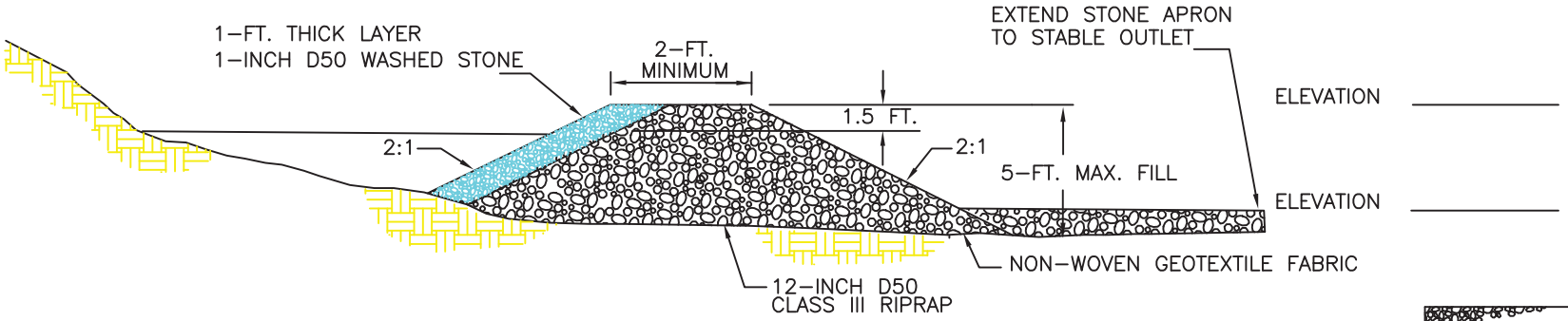

STONE SECTION

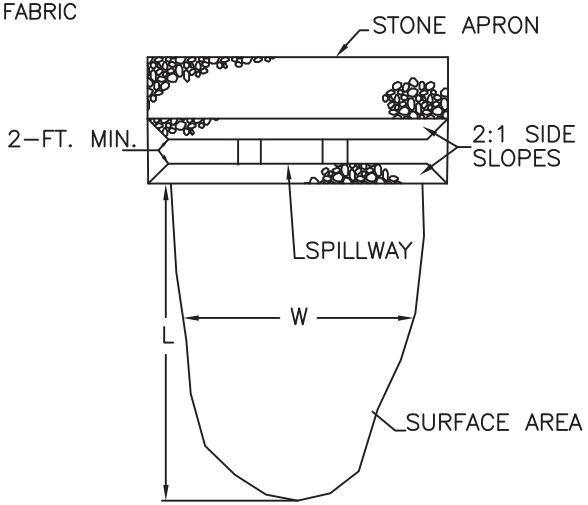

L= (2*W) MIN.

PLAN VIEW

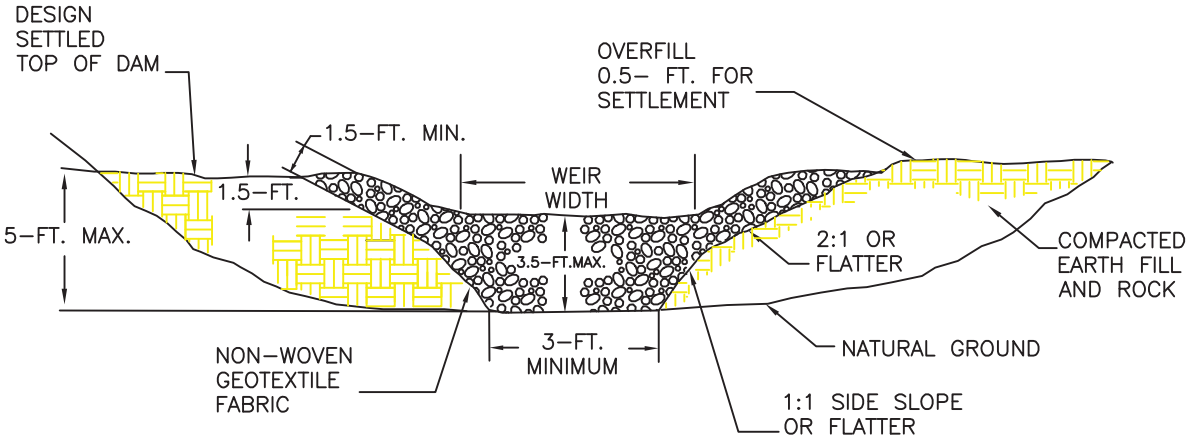

EMBANKMENT AND SPILLWAY ELEVATION

Fort Jackson
Land Disturbance Handbook

SEDIMENT TRAP

STANDARD DRAWING NO. EC–02 Page 1 of 2

SEDIMENT TRAP

When and Where to Use It

Sediment traps should not be placed in waters of the State or USGS blue–line streams (unless approved by Fort Jackson, State, or Federal authorities).

Installation:

Rock Outlet Structure Requirements:

The maximum sediment trap height shall be 5–feet.
The maximum stone height of the outlet weir shall be 3.5–feet.
The minimum bottom flow width of the structure shall be 3–feet.
The minimum top flow length of the structure shall be 2–feet.

The main body of the outlet structure shall consist of 12–inch D50 class III riprap. The upstream face of the outlet structure shall consist of a 1–foot thick layer of 1–inch D50 washed stone. The maximum sideslope of the rock structure shall be 2:1.

Install a non–woven geotextile filter fabric before installing the stone for the outlet structure. Allow the stone to extend downstream past the toe of the embankment. Geotextile filter fabric shall conform to the specifictions.

All inside sediment trap slopes should be 3:1 or flatter.

Mark the sediment cleanout level of trap with a stake in the field. Seed and mulch all disturbed areas.

Inspection and Maintenance:

The key to a functional sediment trap is continual monitoring, regular maintenance and regular sediment removal.

Remove sediment when it reaches 50% of storage volume or reaches the top of cleanout stake.

Regular inspections should be done every seven (7) calendar days and within 24–hours after each rainfall event that produces ½–inches or more of precipitation.

All temporary sediment traps should be removed within 30 days after final site stabilization is achieved or after it is no longer needed.

Trapped sediment should be removed from, or stabilized on site.

Disturbed areas resulting from the removal of the sediment trap should be permanently stabilized.

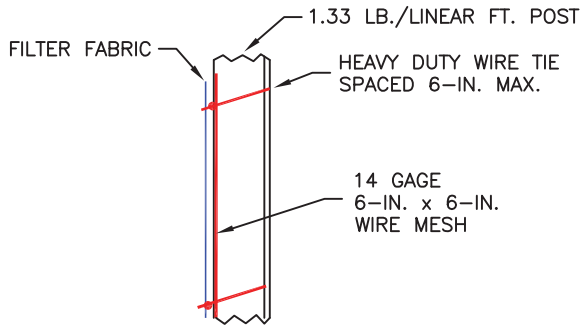

FABRIC ATTACHMENT DETAIL

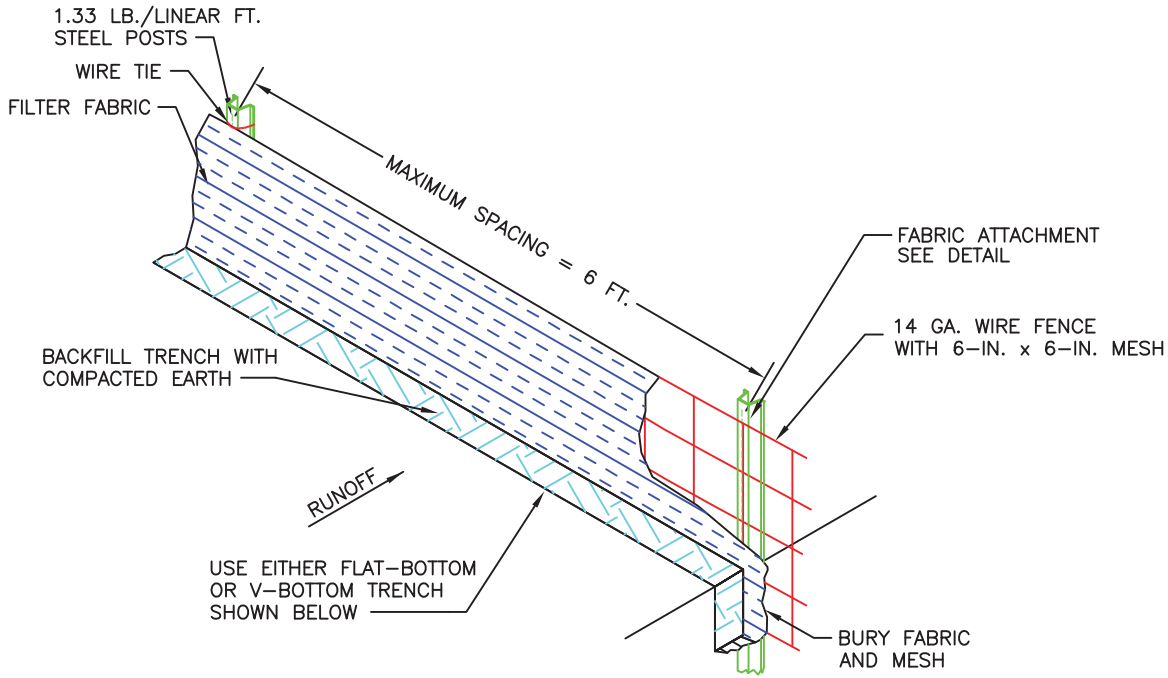

SILT FENCE INSTALLATION

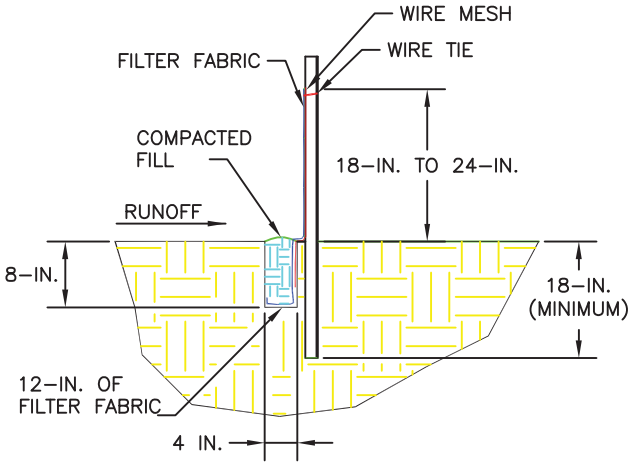

FLAT-BOTTOM TRENCH DETAIL

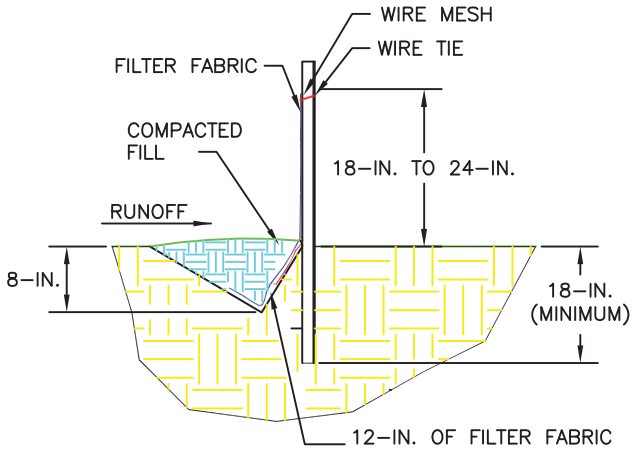

V-SHAPED TRENCH DETAIL

Fort Jackson
Land Disturbance Handbook

REINFORCED SILT FENCE

STANDARD DRAWING NO. EC–04 Page 1 of 3

REINFORCED SILT FENCE

Installation:

The fence should be placed at all fill slopes and soil berms or where the distrubed area that is no more then $\frac{1}{4}$ acre per 100 feet of fabric. The fence shall run across the slope along a line of uniform elevation (perpendicular to the direction of flow). The fence should be located at least 10-feet from the toe of steep slopes to provide sediment storage and access for maintenance and cleanout.

A flat-bottom trench approximately 4-inches wide and 8-inches deep, or a V-shaped trench 8-inches deep should be excavated.

Place 12-inches of specified filter fabric into the 8-inch deep trench, extending the remaining 4-inches towards the up-slope side of the trench.

Extend the 6-inch by 6-inch 14-gage wire mesh into the trench a minimum depth of 8-inches.

Backfill the trench with soil or gravel and compact. Mechanical compaction should be performed as necessary to ensure proper functioning of the fence and posts.

On the downslope side of the trench, drive the 1.33 lb./linear foot steel posts at least 18-inches into the ground, spacing them no further than 6-feet apart.

Posts should be installed, with 1- to 2-inches of the post protruding above the top of the fabric and no more than 36-inches of the post should protrude above the ground. The minimum fence height (height of filter fabric) above grade shall be 18-inches. The maximum fence height (height of filter fabric) above grade shall be 24-inches.

Filter fabric should be purchased in a continuous roll and cut to the length of the barrier to avoid the use of joints. When joints are necessary, filter fabric should be wrapped together only at a support post with both ends securely fastened to the post, with a minimum 6-inch overlap. Only those filter fabrics that meet the specifications detailed by Fort Jackson shall be used.

Heavy duty wire ties spaced a maximum of 6-inches apart, should be used to attach the fabric and wire mesh to the steel posts.

REINFORCED SILT FENCE

Inspection and Maintenance:

Inspect silt fence every seven (7) calendar days and within 24–hours after each rainfall event that produces ½–inches or more of precipitation. Check for areas where runoff has eroded a channel beneath the fence, or where the fence was caused to sag or collapse by runoff overtopping the fence.

If the fence fabric tears, begins to decompose, or in any way becomes ineffective, replace the affected section of fence immediately.

Sediment must be removed when it reaches approximately 1/3 the height of the fence, especially if heavy rains are expected.

Reinforced silt fence should be removed within 30 days after final site stabilization is achieved or after temporary BMPs are no longer needed. Trapped sediment should be removed or stabilized on site. Disturbed areas resulting from fence removal shall be permanently stabilized.

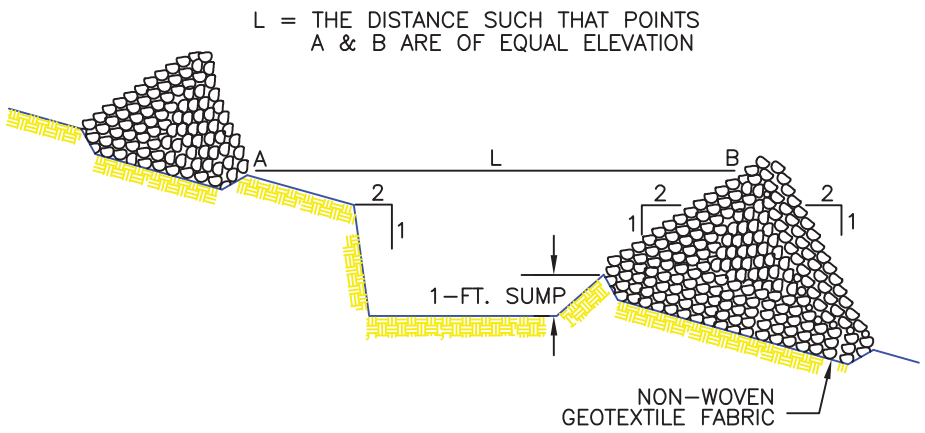

SPACING BETWEEN DITCH CHECK

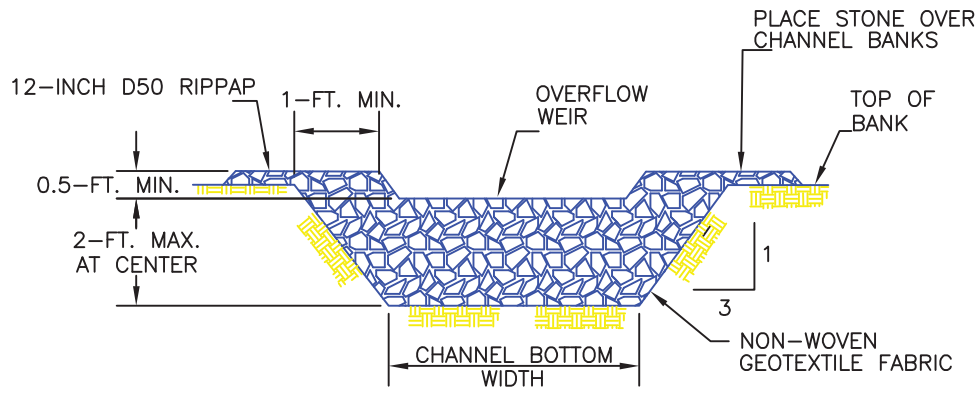

CROSS SECTION A-A THRU STONE DITCH CHECK

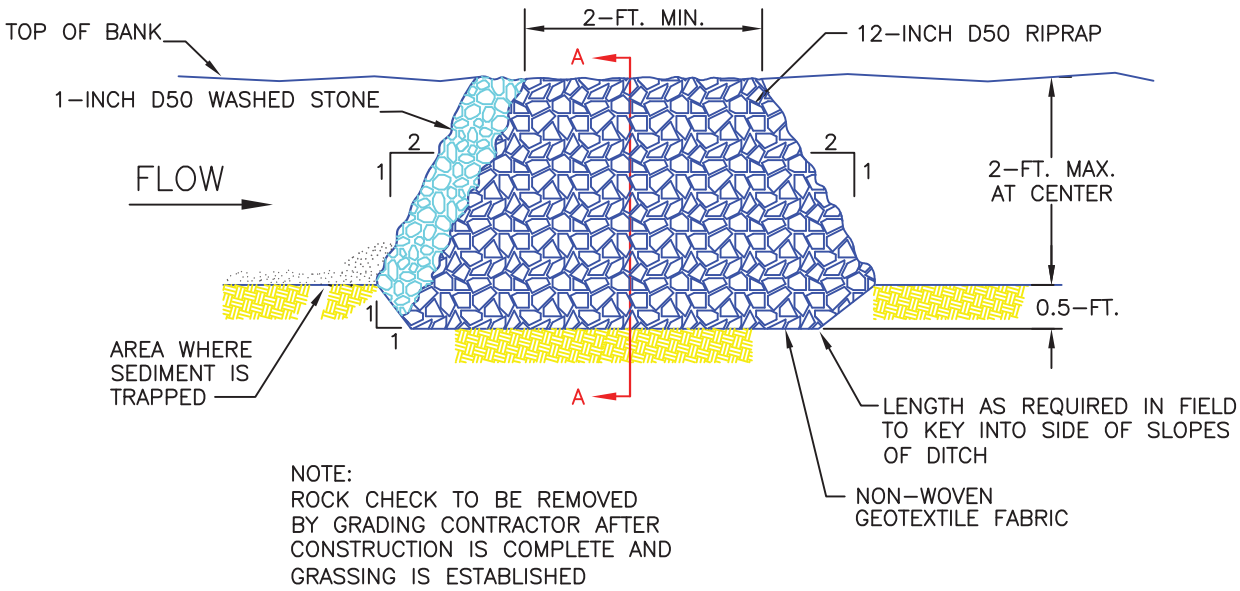

NOTE:
ROCK CHECK TO BE REMOVED
BY GRADING CONTRACTOR AFTER
CONSTRUCTION IS COMPLETE AND
GRASSING IS ESTABLISHED

TYPICAL DITCH CHECK SECTION

Fort Jackson
Land Disturbance Handbook

ROCK DITCH CHECK

STANDARD DRAWING NO. EC-05 Page 1 of 2

ROCK DITCH CHECK

When and Where to Use It

A rock ditch check should be installed in steeply sloped swales, or in swales where adequate vegetation cannot be established. Rock ditch checks should be used only in small open channels. Rock ditch checks should not be placed in waters of the State or US or as designated by USGS topographical blue–line streams.

Installation:

A non–woven geotextile fabric shall be installed over the soil surface where the rock ditch check is to be placed. The geotextile fabric shall conform to Fort Jackson specifications. The body of the rock ditch check shall be composed of 12–inch D50 Riprap.

The upstream face of the rock ditch check may be composed of 1–inch D50 washed stone.

Rock ditch checks should not exceed a height of 2–feet at the centerline of the channel.

Rock ditch checks should have a minimum top flow length of 2–feet.

Stone should be placed over the channel banks to prevent water from cutting around the ditch check.

The rock must be placed by hand or mechanical placement (no dumping of rock to form dam) to achieve complete coverage of the ditch or swale and to ensure that the center of the check is lower than the edges.

The maximum spacing between the dams should be such that the toe of the upstream check is at the same elevation as the top of the downstream check.

Inspection and Maintenance:

Inspect rock ditch checks every seven (7) calendar days and within 24–hours after each rainfall event that produces ½–inches or more of precipitation. Inspect for sediment and debris accumulation. Inspect ditch check edges for erosion and repair promptly as required.

Sediment should be removed when it reaches 1/3 the original check height.

In the case of grass–lined ditches and swales, rock ditch checks should be removed when the grass has matured sufficiently to protect the ditch or swale unless the slope of the swale is greater than 4%.

After construction is complete, all stone should be removed by the grading contractor if vegetation will be used for permanent erosion control measures.

The area beneath the rock ditch checks should be seeded and mulched immediately after rock check dam removal.

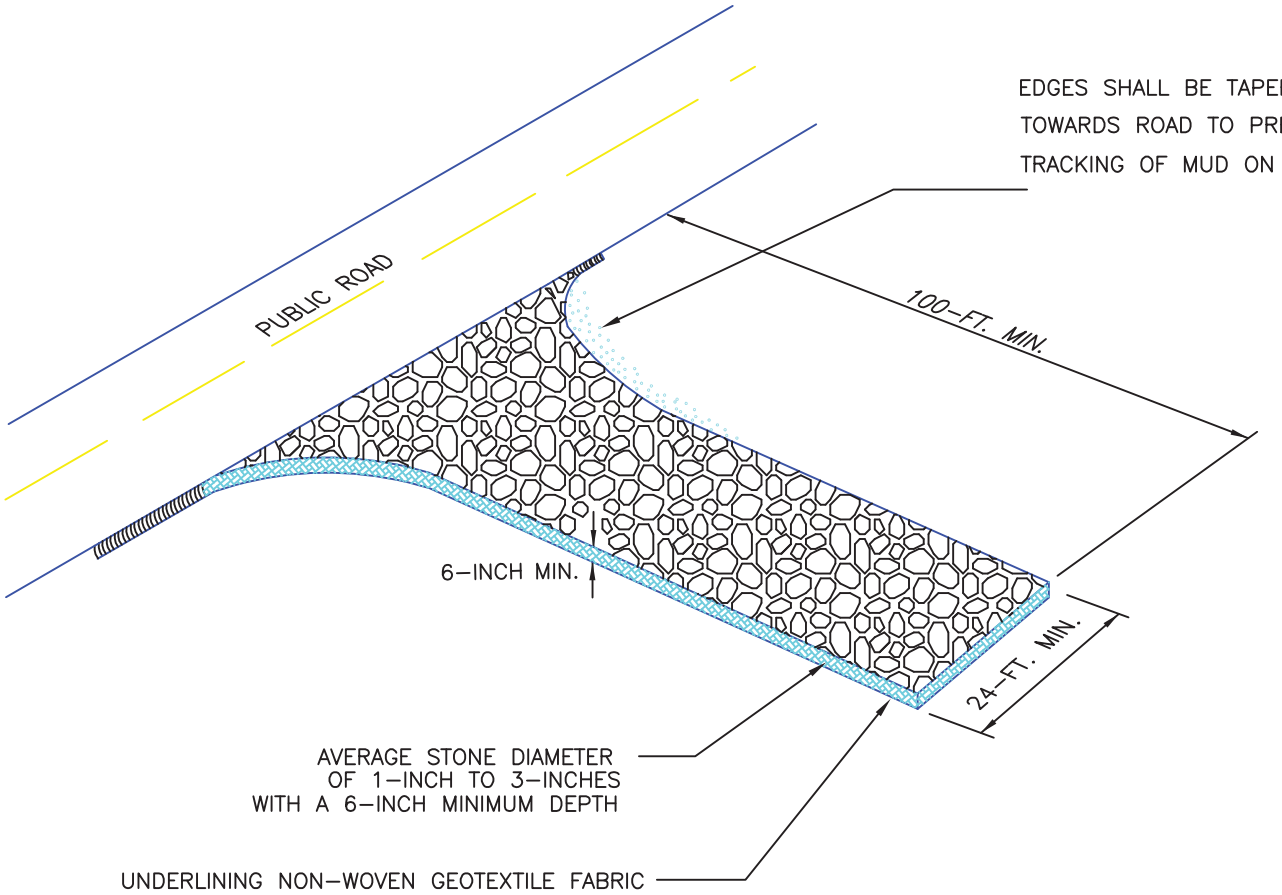

INSTALL A CULVERT PIPE ACROSS THE ENTRANCE WHEN NEEDED TO PROVIDE POSITIVE DRAINAGE.

DIVERT ALL SURFACE RUNOFF AND DRAINAGE FROM THE STONE PAD TO A SEDIMENT TRAP OR BASIN OR OTHER SEDIMENT TRAPPING STRUCTURE.

Fort Jackson
Land Disturbance Handbook

STABILIZED CONSTRUCTION ENTRANCE

STANDARD DRAWING NO. EC-06 Page 1 of 3

STABILIZED CONSTRUCTION ENTRANCE

When and Where to Use It

Stabilized construction entrances should be used at all points where traffic will be leaving a construction site and moving directly onto a public road.

Important Considerations

If washing is used, provisions must be made to intercept the wash water and trap the sediment before it is carried offsite. Washdown facilities shall be required as directed by Fort Jackson personnel as needed. Washdown areas in general must be established with crushed gravel and drain into a sediment trap or sediment basin. Construction entrances should be used in conjunction with the stabilization of construction roads to reduce the amount of mud picked up by vehicles.

Installation:

Remove all vegetation and any objectionable material from the foundation area.

Divert all surface runoff and drainage from stones to a sediment trap or basin.

Install a non–woven geotextile fabric prior to placing any stone. The geotextile fabric shall conform to Fort Jackson specifications.

Install a culvert pipe across the entrance when needed to provide positive drainage.

The entrance shall consist of 1–inch to 3–inch D50 stone placed at a minimum depth of 6–inches.

Minimum dimensions of the entrance shall be 24–feet wide by 100–feet long, and may be modified as necessary to accommodate site constraints.

The edges of the entrance shall be tapered out towards the road to prevent tracking of mud at the edge of the entrance.

STABILIZED CONSTRUCTION ENTRANCE

Inspection and Maintenance:

Inspect construction entrances every seven (7) calendar days and within 24–hours after each rainfall event that produces ½–inches or more of precipitation, or after heavy use. Check for mud and sediment buildup and pad integrity. Make daily inspections during periods of wet weather. Maintenance is required more frequently in wet weather conditions. Reshape the stone pad as needed for drainage and runoff control.

Wash or replace stones as needed and as directed by the inspector. The stone in the entrance should be washed or replaced whenever the entrance fails to reduce mud being carried off–site by vehicles. Frequent washing will extend the useful life of stone.

Immediately remove mud and sediment tracked or washed onto public roads by brushing or sweeping. Mud and sediment should not swept or brushed into inlets. Flushing should only be used when the water can be discharged to a sediment trap or basin.

Repair any broken pavement immediately.

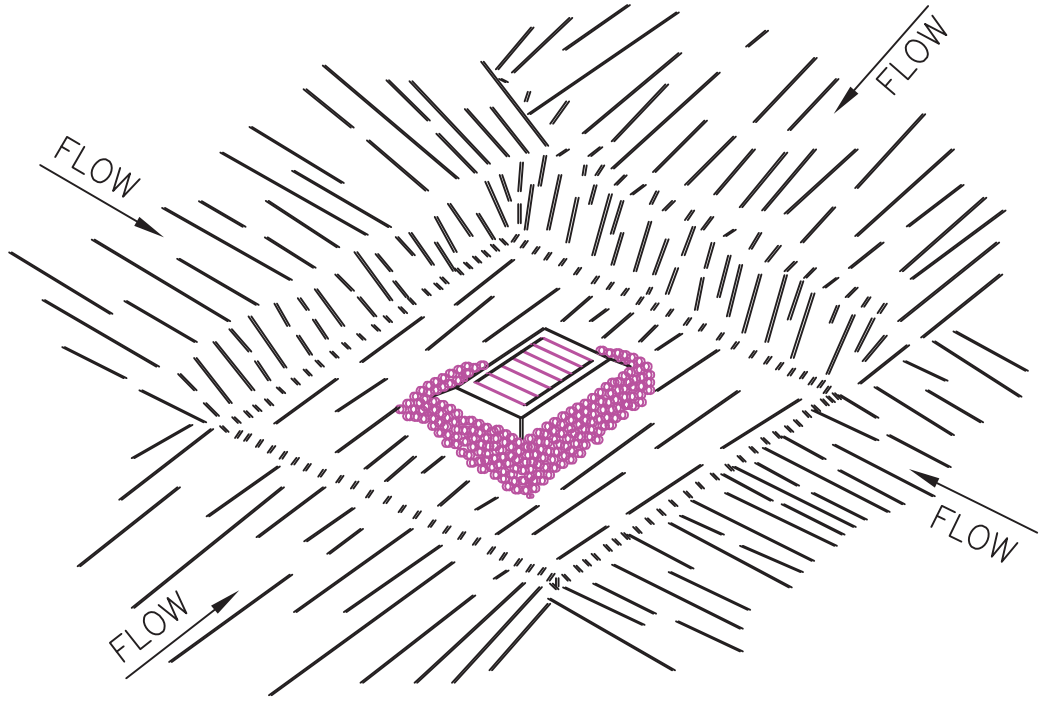

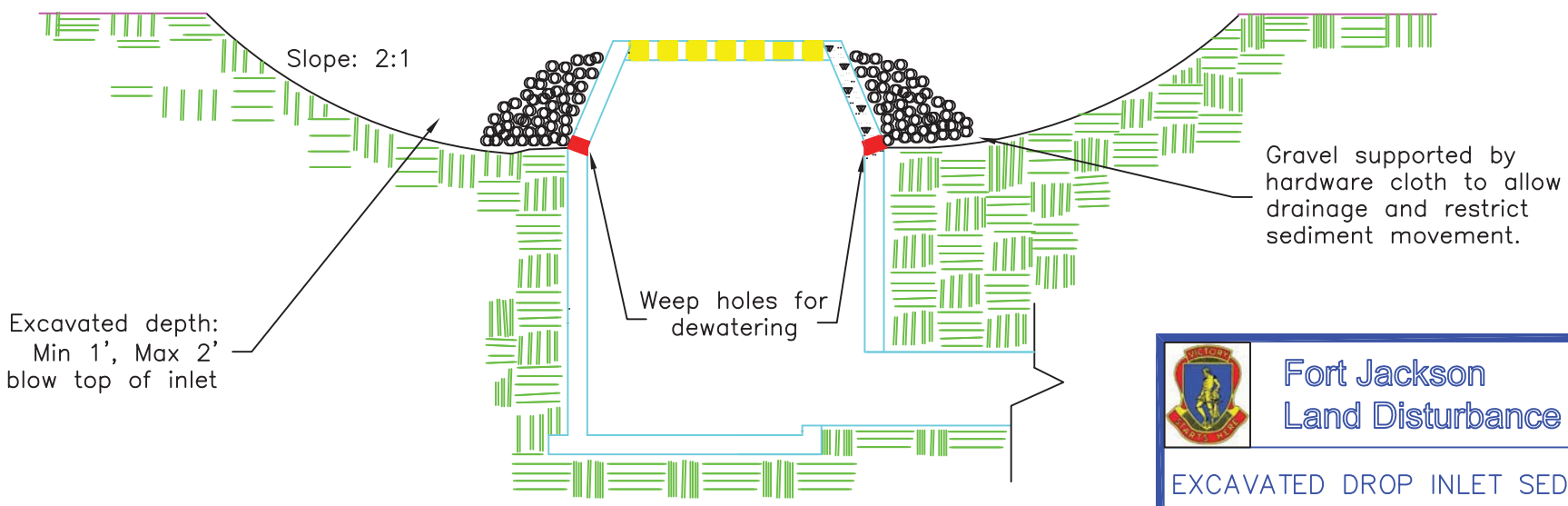

Fort Jackson
Land Disturbance Handbook

EXCAVATED DROP INLET SEDIMENT TRAP

STANDARD DRAWING NO. EC–07 Page 1 of 2

EXCAVATED DROP INLET SEDIMENT TRAP

This type of inlet protection is applicable where heavy flows are expected and where overflow capability and ease of maintenance are desired.

Installation:

Clear area prior to excavation. Grade area uniformely around the basin.

Excavate are described. Protect weep holes with gravel.

Filter fabric is used for inlet protection when storm water flows are relatively small (0.5 cfs or less) with low velocities and where the inlet drains a relatively flat area (slopes no greater than 5%). This practice cannot be used where inlets are paved or where inlets receive concentrated flows such as in streets or highway medians. The geotextile fabric shall conform to Fort Jackson specifications.

Filter fabric should be purchased in a continuous roll and cut to the length of the barrier to avoid the use of joints. When joints are necessary, filter fabric should be wrapped together only at a support post with both ends securely fastened to the post, with a minimum 6–inch overlap.

The maximum drainage area to this type of inlet is 1 acre.

Inspection and Maintenance:

Inspections should be made every seven (7) calendar days and within 24–hours after each rainfall event that produces ½–inches or more of precipitation. Any needed repairs should be handled immediately.

Sediment should be removed when it reaches approximately 1/3 the depth of the hole. Maintain the pool area, always providing adequate sediment storage volume for the next storm.

Storm drain inlet protection structures should be removed only after the disturbed areas are permanently stabilized. Remove all construction material and sediment, and dispose of them properly. Grade the disturbed area to the elevation of the drop inlet structure crest. Use appropriate permanent stabilization methods to stabilize bare areas around the inlet.

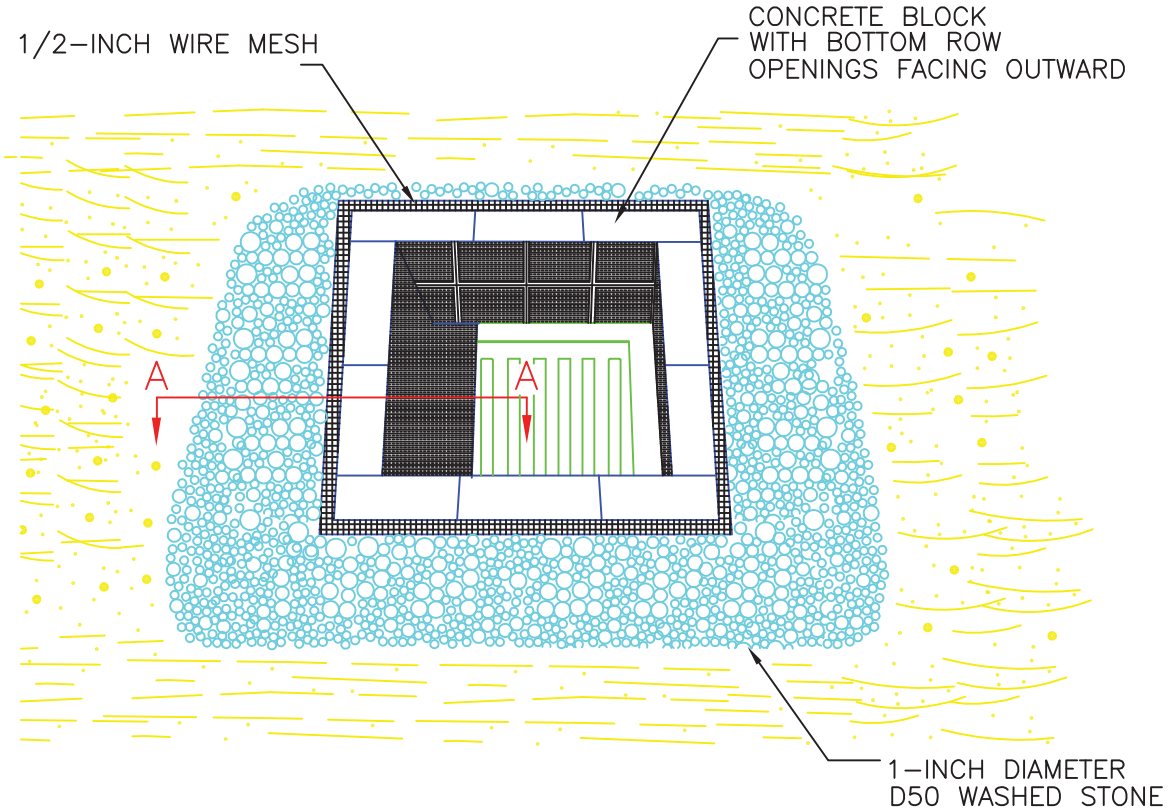

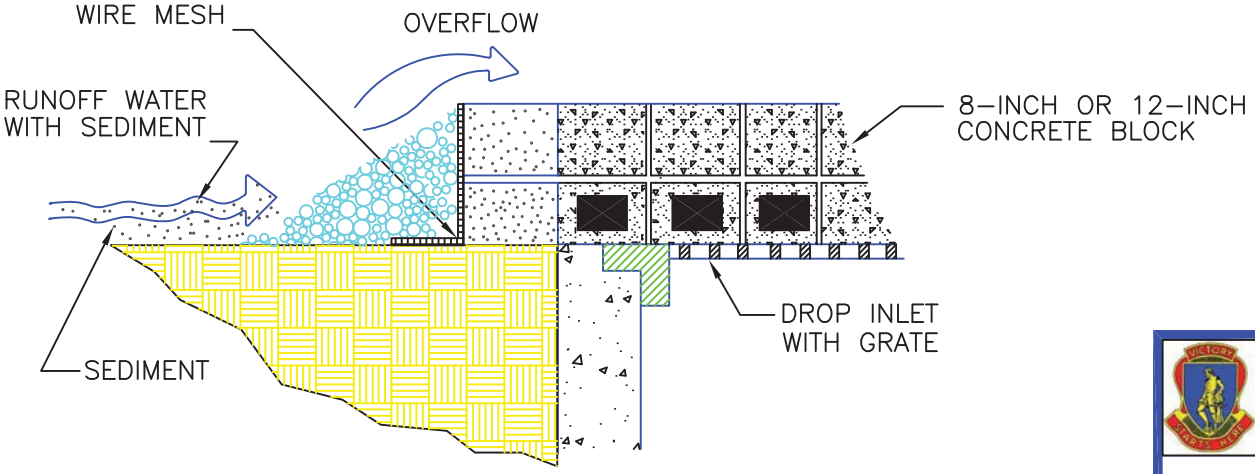

CROSS SECTION A-A

Fort Jackson
Land Disturbance Handbook

BLOCK AND GRAVEL DROP INLET PROTECTION

STANDARD DRAWING NO. EC–08 Page 1 of 2

BLOCK AND GRAVEL DROP INLET PROTECTION

Installation:

Block and gravel filters can be used where heavy flows and higher velocities are expected and where an overflow capacity is necessary to prevent excessive ponding around the structure.

Gravel shall consist of 1–inch D50 Washed Stone and should extend to height equal to the elevation of the top of the blocks.

Place the bottom row of the concrete blocks lengthwise on their side so that the open end faces outward, not upward.

The height of the barrier can be varied, depending upon design needs by stacking a combination of blocks that are 8– and 12–inches wide.

Wire mesh should be placed over the outside vertical face of the concrete blocks to prevent stones from being washed through the holes in the blocks. Hardware cloth or comparable wire mesh with ½–inch x ½–inch openings should be used.

Inspection and Maintenance:

Inspections should be made every seven (7) calendar days and within 24–hours after each rainfall event that produces ½–inches or more of precipitation. Any needed repairs should be handled immediately.

Sediment should be removed when it reaches approximately 1/3 the height of the blocks. If a sump is used, sediment should be removed when it fills approximately 1/3 the depth of the hole.

If the stone filter becomes clogged with sediment, the stones must be pulled away from the inlet and cleaned or replaced. Since cleaning of gravel at a construction site may be difficult, an alternative approach would be to use the clogged stone as fill and put fresh stone around the inlet.

Storm drain inlet protection structures should be removed only after the disturbed areas are permanently stabilized. Remove all construction material and sediment, and dispose of them properly. Grade the disturbed area to the elevation of the drop inlet structure crest. Stabilize all bare areas immediately.

GRAVEL CURB INLET PROTECTION WITH SEDIMENT FILTER

Installation:

gravel filters can be used where heavy flows and higher velocities are expected and where an overflow capacity is necessary to prevent excessive ponding around the structure.

Gravel shall consist of SCDOT #4 Stone and should extend to height equal to the elevation of the top of the blocks.

Wire mesh should be placed over the top of the curb inlet. Hardware cloth or comparable wire mesh with ½–inch x ½–inch openings should be used.

Inspection and Maintenance:

Inspections should be made every seven (7) calendar days and within 24–hours after each rainfall event that produces ½–inches or more of precipitation. Any needed repairs should be handled immediately.

Sediment should be removed when it reaches approximately 1/3 the height of the inlet.

If the stone filter becomes clogged with sediment, the stones must be pulled away from the inlet and cleaned or replaced. Since cleaning of gravel at a construction site may be difficult, an alternative approach would be to use the clogged stone as fill and put fresh stone around the inlet.

Storm drain inlet protection structures should be removed only after the disturbed areas are permanently stabilized. Remove all construction material and sediment, and dispose of them properly. Grade the disturbed area to the elevation of the drop inlet structure crest. Stabilize all bare areas immediately.

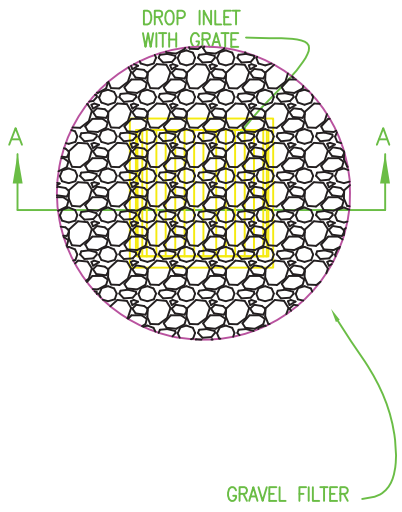

PLAN VIEW

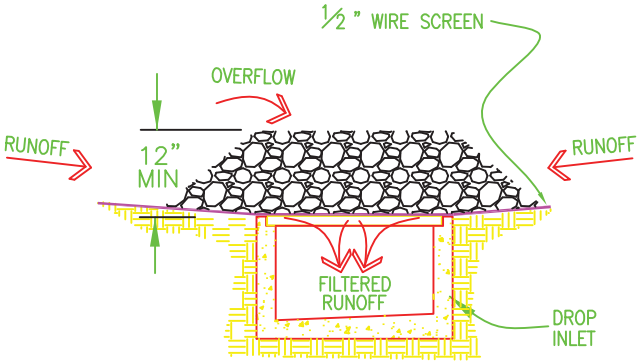

CROSS SECTION A–A

DROP INLET BLOCK AND GRAVEL FILTER

Fort Jackson
Land Disturbance Handbook

GRAVEL CURB INLET PROTECTION WITH SEDIMENT FILTER

STANDARD DRAWING NO. EC–09 Page 1 of 1

BLOCK AND GRAVEL CURB INLET PROTECTION

Installation:

Block and gravel filters can be used where heavy flows and higher velocities are expected and where an overflow capacity is necessary to prevent excessive ponding around the structure.

Gravel shall consist of SCDOT #4 Stone and should extend to height equal to the elevation of the top of the blocks.

Place the bottom row of the concrete blocks lengthwise on their side so that the open end faces outward, not upward.

The height of the barrier can be varied, depending upon design needs by stacking a combination of blocks that are 8– and 12–inches wide.

Wire mesh should be placed over the outside vertical face of the concrete blocks to prevent stones from being washed through the holes in the blocks. Hardware cloth or comparable wire mesh with ½–inch x ½–inch openings should be used.

Inspection and Maintenance:

Inspections should be made every seven (7) calendar days and within 24–hours after each rainfall event that produces ½–inches or more of precipitation. Any needed repairs should be handled immediately.

Sediment should be removed when it reaches approximately 1/3 the height of the blocks. If a sump is used, sediment should be removed when it fills approximately 1/3 the depth of the hole.

If the stone filter becomes clogged with sediment, the stones must be pulled away from the inlet and cleaned or replaced. Since cleaning of gravel at a construction site may be difficult, an alternative approach would be to use the clogged stone as fill and put fresh stone around the inlet.

Storm drain inlet protection structures should be removed only after the disturbed areas are permanently stabilized. Remove all construction material and sediment, and dispose of them properly. Grade the disturbed area to the elevation of the drop inlet structure crest. Stabilize all bare areas immediately.

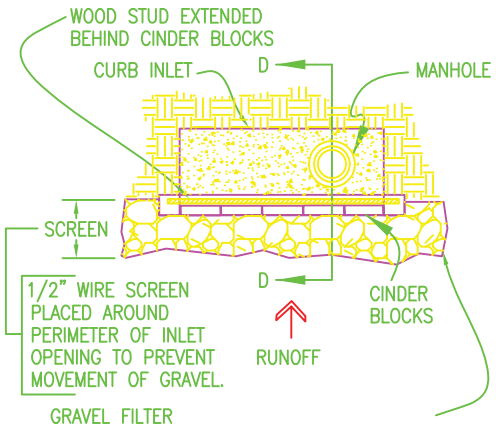

PLAN VIEW

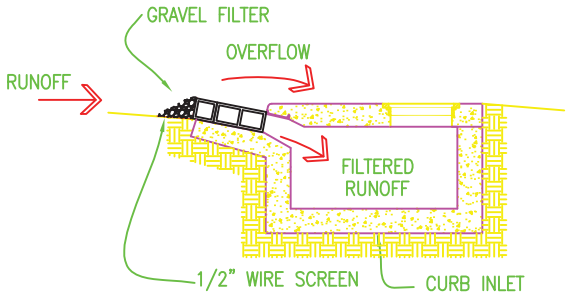

CROSS SECTION D–D

CURB INLET BLOCK AND GRAVEL FILTER

(LOW VOLUME TRAFFIC AREAS ONLY)

Fort Jackson
Land Disturbance Handbook

BLOCK AND GRAVEL CURB INLET PROTECTION

STANDARD DRAWING NO. EC–10 Page 1 of 1

GRAVEL CURB INLET PROTECTION WITH SEDIMENT FILTER

Installation:

gravel filters can be used where heavy flows and higher velocities are expected and where an overflow capacity is necessary to prevent excessive ponding around the structure.

Gravel shall consist of SCDOT #4 Stone and should extend to height equal to the elevation of the top of the blocks.

Wire mesh should be placed over the top of the curb inlet. Hardware cloth or comparable wire mesh with ½–inch x ½–inch openings should be used.

Inspection and Maintenance:

Inspections should be made every seven (7) calendar days and within 24–hours after each rainfall event that produces ½–inches or more of precipitation. Any needed repairs should be handled immediately.

Sediment should be removed when it reaches approximately 1/3 the height of the inlet.

If the stone filter becomes clogged with sediment, the stones must be pulled away from the inlet and cleaned or replaced. Since cleaning of gravel at a construction site may be difficult, an alternative approach would be to use the clogged stone as fill and put fresh stone around the inlet.

Storm drain inlet protection structures should be removed only after the disturbed areas are permanently stabilized. Remove all construction material and sediment, and dispose of them properly. Grade the disturbed area to the elevation of the drop inlet structure crest. Stabilize all bare areas immediately.

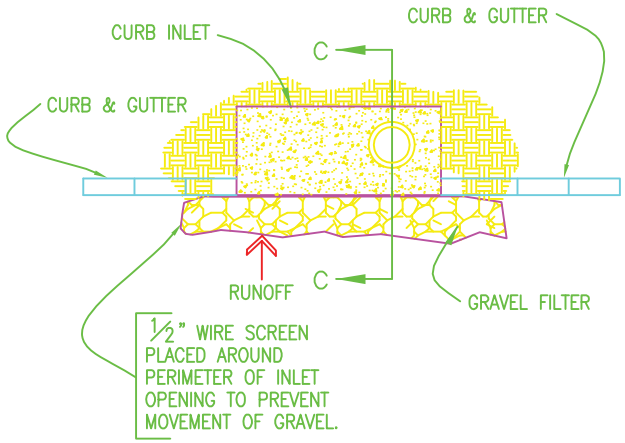

PLAN VIEW

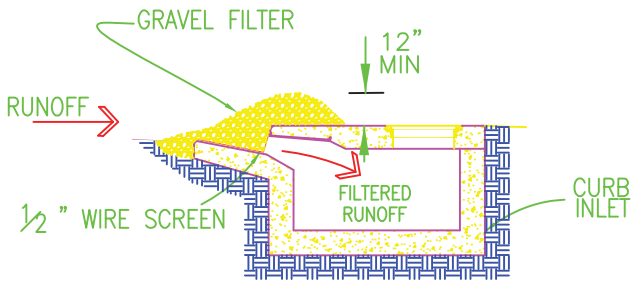

CROSS SECTION C–C

CURB INLET GRAVEL AND WIRE MESH FILTER

Fort Jackson
Land Disturbance Handbook

GRAVEL CURB INLET PROTECTION WITH SEDIMENT FILTER

STANDARD DRAWING NO. EC–11 Page 1 of 1

CURB INLET PROTECTION WITH
2"X4" WOODEN WEIR

Installation:

Wooden frame shall be constructed of 2–inch x 4–inch construction grade lumber.

Filter fabric shall conform to Fort Jackson specifications.

Wire mesh across throat shall be continuous piece of 30–inch minimum width with a length 4 feet longer than throat. It shall be shaped and securely nailed to a 2" x 4" weir.

The assembly shall be securely nailed to to 2" x 4" spacers 9–inches long spaced a minimum of 6–feet apart. spacers 9–inches long spaced a minimum of 6–feet apart.

The assembly shall be placed against the inlet and secured by 2" x 4" anchors 2–feet long extending across the top of the inlet and held in place by sandbags or alternative weights.

The maximum drainage area is 1–acre.

The stone shall consist of SCDOT #4 Washed Stone, shall extend to a minimum height of 12–inches, and shall not exceed 24–inches.

Inspection and Maintenance:

Inspections should be made every seven (7) calendar days and within 24–hours after each rainfall event that produces ½–inches or more of precipitation. Any needed repairs should be handled immediately.

Sediment should be removed when it reaches approximately 1/3 the height of the structure.

If the stone becomes clogged with sediment, the stones must be pulled away from the inlet and cleaned or replaced. Since cleaning of gravel at a construction site may be difficult, an alternative approach would be to use the clogged stone as fill and put fresh stone around the inlet.

Storm drain inlet protection structures should be removed only after the disturbed areas are permanently stabilized. Remove all construction material and sediment, and dispose of them properly. Grade the disturbed area to the elevation of the drop inlet structure crest. Stabilize all bare areas immediately.

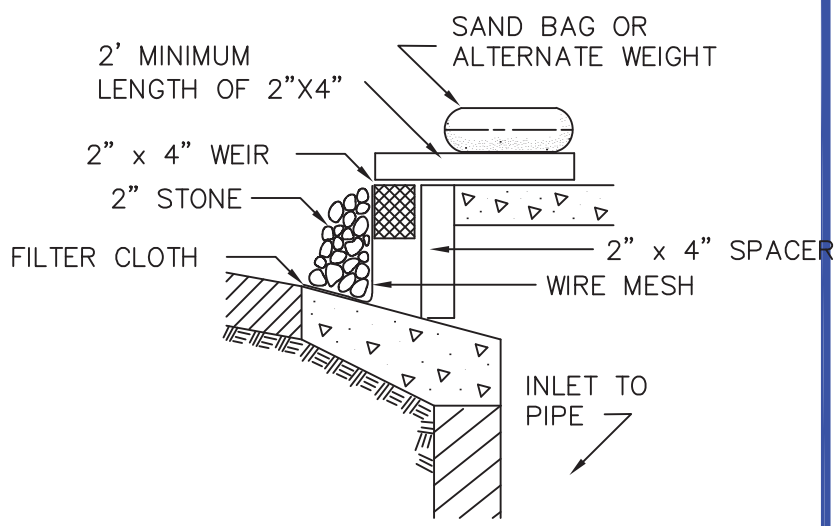

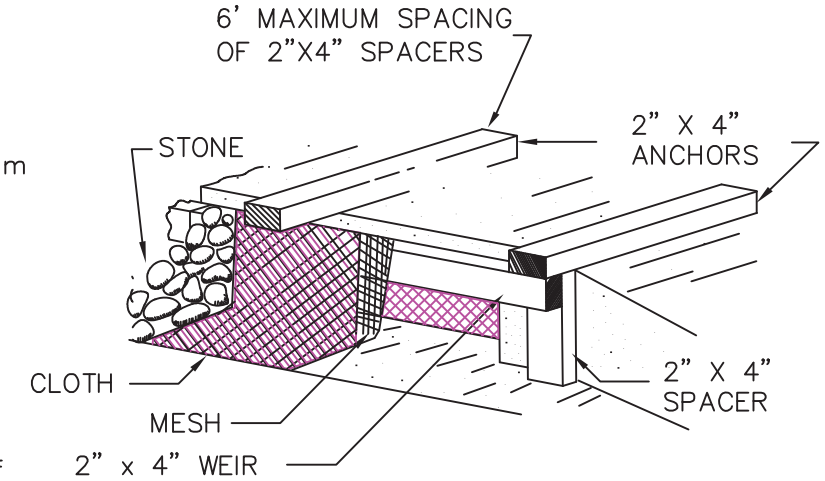

Fort Jackson
Land Disturbance Handbook

CURB INLET PROTECTION WITH WOODEN WEIR

STANDARD DRAWING NO. EC–12 Page 1 of 1

APPROVED BY: _____ FORT JACKSON DLE–ENRD _____ DATE

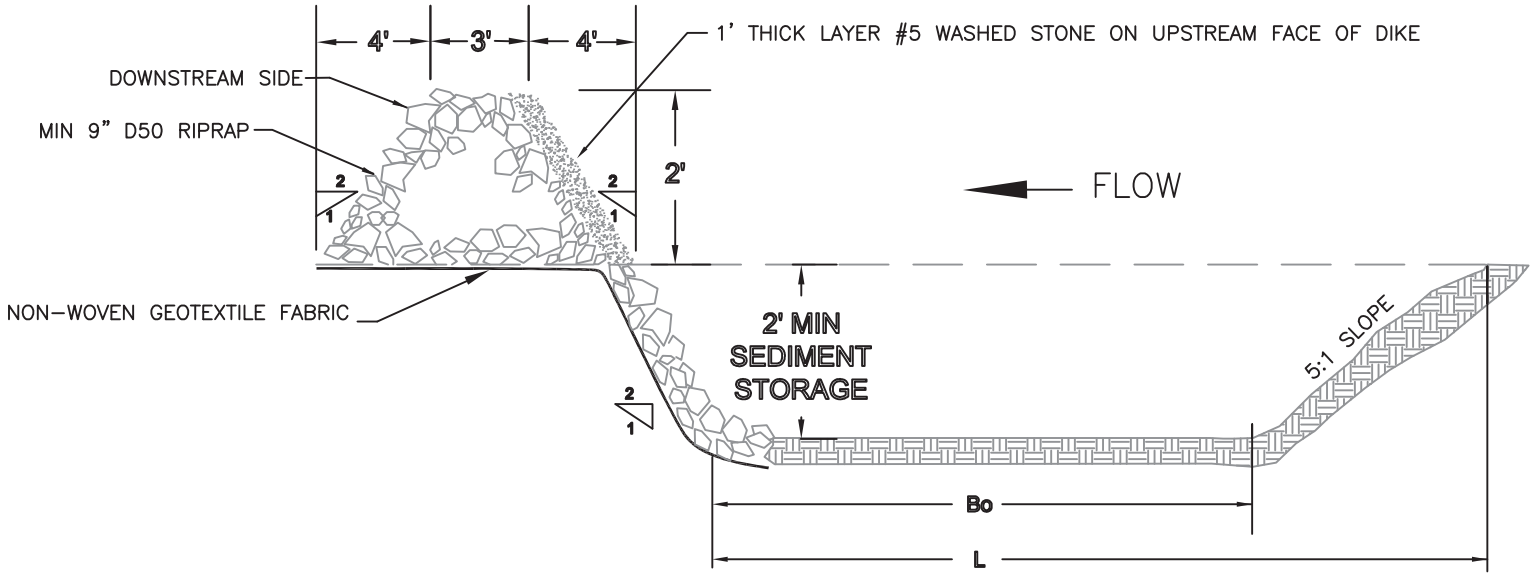

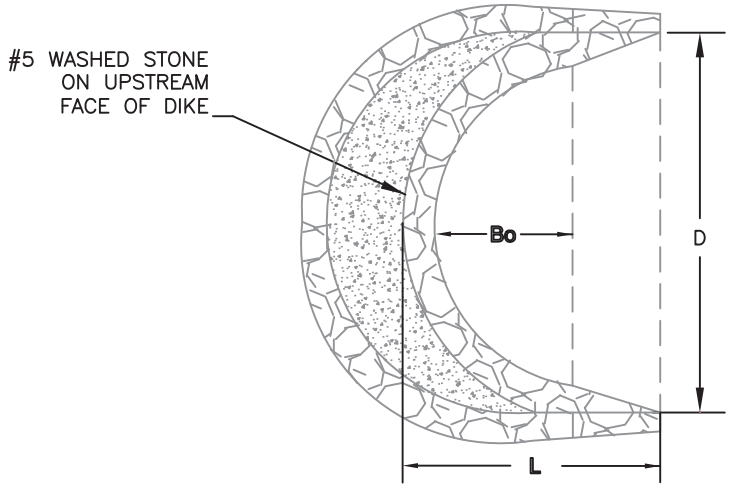

⇦ FLOW

MAXIMUM 2-ACRE DRAINAGE AREA TO DIKE

TYPICAL ROCK DIKE DIMENSIONS

D	L	Bo	PEAK FLOW (CFS)	TOTAL STORAGE VOL. (CU. FT.)	SEDIMENT STORAGE VOLUME (CU. FT.)
15'	17.5'	3.5'	24.1	838	250
20'	20.0'	6.0'	32.1	1263	406
25'	22.5'	8.5'	40.1	1766	601
30'	25.0'	11.0'	48.2	2348	836

Fort Jackson
Land Disturbance Handbook

ROCK SEDIMENT DIKE

STANDARD DRAWING NO. EC-13 Page 1 of 3

ROCK SEDIMENT DIKE

When and Where to Use It :

Rock sediment dikes are most effective in areas where sediment control is needed with minimal disturbance. They can be used as sediment control structures for the outfalls of diversion swales, diversion dikes, in low areas or other areas where concentrated sediment laden flow is expected. Rock sediment dikes should not be placed in Waters of the State or any other streams that have a base flow.

Installation:

A non-woven geotextile fabric shall be installed over the soil surface where the rock sediment dike is to be placed. Filter fabric shall conform to Fort Jackson specifications.

The body of the rock sediment dike shall be composed of minimum 9-inch D50 Riprap.

The upstream face of the rock sediment dike shall be composed of a 1-foot thick layer of 3/4-inch to 1-inch D50 washed stone placed at a slope of 2H:1V.

Rock sediment dikes shall have a minimum top flow length of 3-feet (2-foot flow length through the riprap and 1-foot flow length through the washed stone).

The rock must be placed by hand or mechanical placement (no dumping of rock to form the sediment dike) to achieve the proper dimensions.

A sediment sump shall be located on the upstream side of the structure to provide sediment storage. The upstream side of the sediment sump shall have a slope of 5H:1V to inhibit erosion of the sediment storage area. The minimum depth of the sediment sump shall be 2-feet. Mark the sediment cleanout level of the sediment dike with a stake in the field.

Seed and mulch all disturbed areas.

ROCK SEDIMENT DIKE

Inspection and Maintenance:

The key to a functional rock sediment dike is continual monitoring, regular maintenance and regular sediment removal.

Regular inspections should be done every seven (7) calendar days and within 24–hours after each rainfall event that produces ½–inches or more of precipitation.

Remove sediment when it reaches 50% of the sediment storage volume or when reaches the top of cleanout stake. Removed sediment from the sump should be removed from, or stabilized on site.

All rock sediment dikes should be removed within 30 days after final site stabilization is achieved or after they are no longer needed. Disturbed areas resulting from the removal of rock sediment dikes should be permanently stabilized.

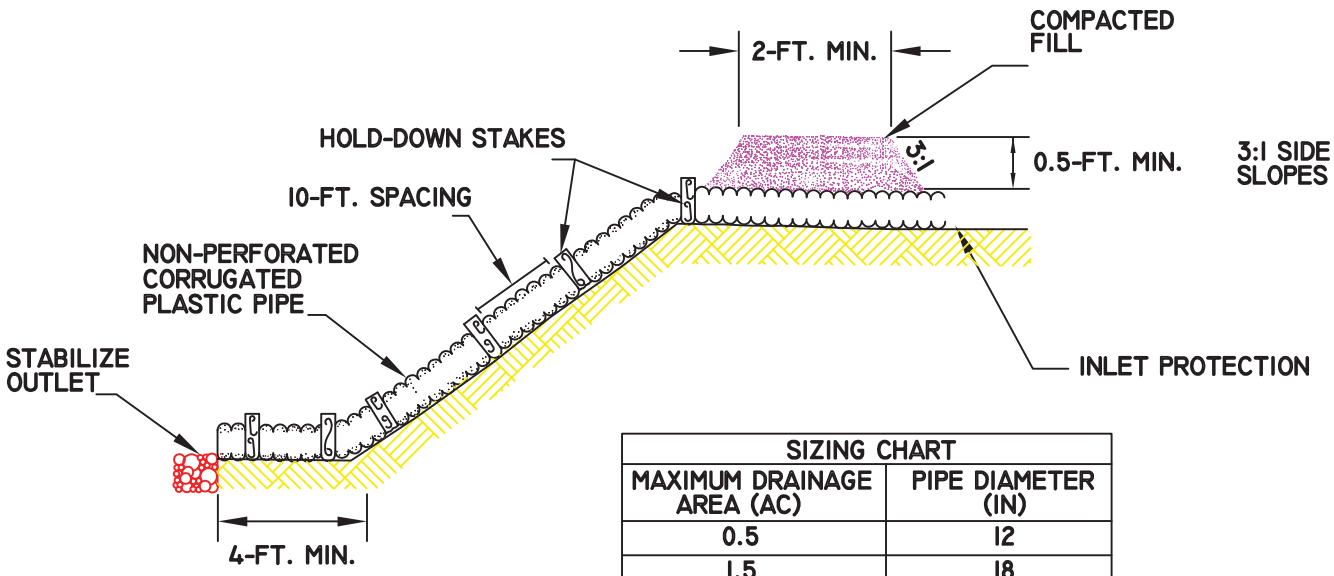

SIZING CHART	
MAXIMUM DRAINAGE AREA (AC)	PIPE DIAMETER (IN)
0.5	12
1.5	18
2.5	21
3.5	24
5.0	30

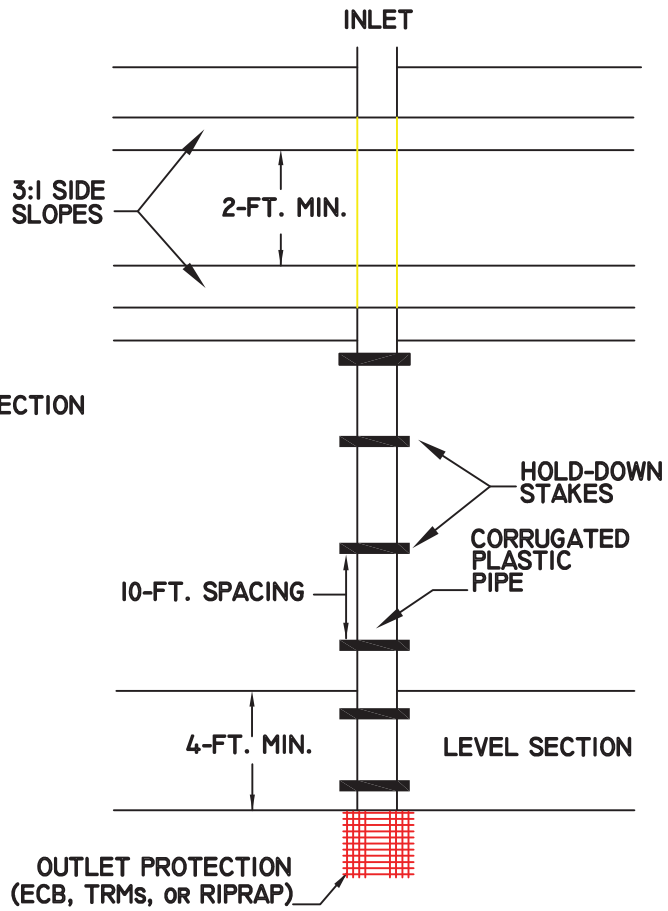

PLAN VIEW

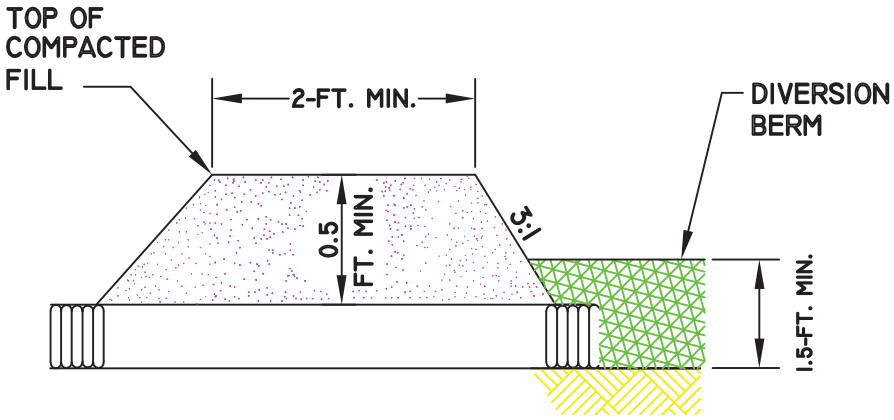

TYPICAL PIPE SLOPE DRAIN LAYOUT

Fort Jackson
Land Disturbance Handbook

PIPE SLOPE DRAIN

STANDARD DRAWING NO. EC–14 Page 1 of 2

PIPE SLOPE DRAIN

When and Where to Use It

Pipe slope drains are used when it is necessary for water to flow down a slope without causing erosion, especially before a slope has been stabilized or before permanent drainage structures are installed.

Installation:

Typical pipe slope drains are made of non-perforated corrugated plastic pipe designed to pass the peak flow rates for the 10-year 24-hour storm event.

Slope drain sections should be securely fastened together, have gasket watertight fittings, and be securely anchored into the soil.

Diversion berms or dikes should direct runoff to slope drains. The minimum depth of these dikes or berms should be 1.5-feet. The height of the berm around the pipe inlet should be a minimum of 1.5-feet high and at least 0.5-feet higher than the top of the pipe. The berm at the pipe inlet shall be compacted around the pipe. The area around the inlet shall be properly stabilized with ECBs, TRMs, riprap or other applicable stabilization techniques.

The area below the outlet must be properly stabilized with ECBs, TRMs, riprap or other applicable stabilization technique.

If the pipe slope drain is conveying sediment-laden water, direct all flows into the sediment trapping facility.

Permanent slope drains should be buried beneath the soil surface a minimum 1.5-feet.

Inspection and Maintenance:

Inspect pipe slope drain inlet and outlet points every seven (7) calendar days and within 24-hours after each rainfall event that produces ½-inches or more of precipitation.

The inlet should be free from undercutting, and no water should be going around the point of entry. If there are problems, the headwall should be reinforced with compacted earth or sandbags. The outlet point should be free of erosion and installed with appropriate outlet protection.

All temporary pipe slope drains should be removed within 30 days after final site stabilization is achieved or after the temporary BMP is no longer needed. Disturbed soil areas resulting from removal should be permanently stabilized.

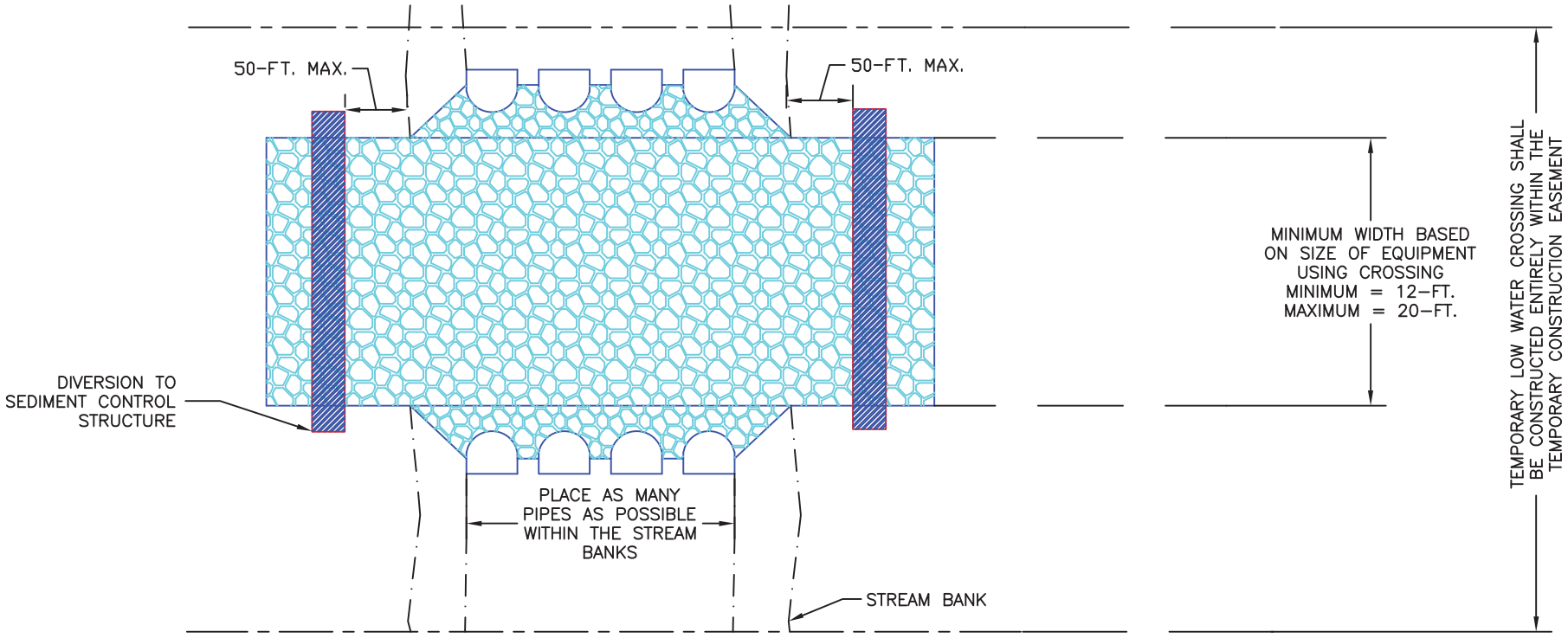

PLAN VIEW

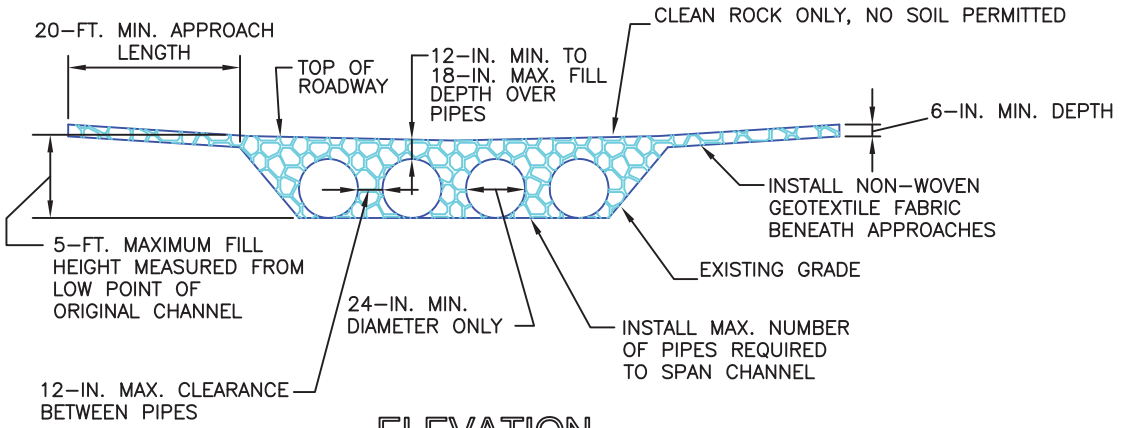

ELEVATION

Fort Jackson
Land Disturbance Handbook

TEMPORARY STREAM
LOW WATER CROSSING

STANDARD DRAWING NO. EC-15 Page 1 of 3

TEMPORARY STREAM LOW WATER CROSSING

Prior to constructing a temporary stream crossing, the owner/person financially responsible for the project must submit an Application for Permit to Construct Across or Along a Stream to the South Carolina Department of Health and Environmental Control (SC DHEC). Temporary stream crossings require a Section 404 Permit from the Corps of Engineers. If the crossing creates more than 200 linear feet of fill or more than 1/3 acre of fill, a 401 permit may be necessary.

Installation:

Crossings shall be installed prior to any other activities.

Pump–around diversions shall be installed and maintained prior to any excavation and during the installation of the crossing.

Crossings shall be placed in temporary construction easements only.

The temporary waterway crossing shall be at right angles to the stream. Where approach conditions dictate, the crossing may vary 15 degrees from a line drawn perpendicular to the centerline of the stream at the intended crossing location. However every effort shall be taken to install the crossing perpendicular to the stream. All fill materials associated with the roadway approach shall be limited to a maximum height of 2–feet above the existing flood plain elevation.

A water diverting structure such as a dike or swale shall be constructed (across the roadway on both roadway approaches) 50–feet (maximum) on either side of the waterway crossing. This will prevent roadway surface runoff from directly entering the waterway. The 50–feet is measured from the top of the waterway bank. The flow captured in these dikes and swales shall be directed to a sediment trapping structure. If the roadway approach is constructed with a reverse grade away from the waterway, a separate diverting structure is not required.

Streambank clearing shall be kept to a minimum. Do not excavate rock bottom streambeds to install the crossing. Lay the culvert pipes on the streambed "as is" when applicable. Place as many pipes as possible within the low area of the stream. Place remaining pipes required to cross the stream on the existing stream bottom.

The maximum number of pipes as possible should be placed within the stream banks with a maximum spacing of 12–inches between pipes. The minimum sized pipe culvert that may be used is 24–inches.

The length of the culvert shall be adequate to extend the full width of the crossing, including side slopes. The slope of the culvert shall be at least 0.25 feet per foot.

Coarse aggregate of clean limestone riprap with a 6–inch D50 stone or greater will be used to form the crossing. The depth of stone cover over the culvert shall be equal to ½ the diameter of the culvert or 12–inches, whichever is greater but no greater than 18–inches.

TEMPORARY STREAM LOW WATER CROSSING

Installation:

All fill materials associated with the roadway approach shall be limited to a maximum height of 2–feet above the existing flood plain elevation.

The approaches to the structure shall consist of clean stone or concrete fill only with a minimum thickness of 6–inches. The minimum approach length shall be 20–feet and the width shall be equal to the width of the structure.

Inspection and Maintenance:

Inspect crossings every seven (7) calendar days and within 24–hours after each rainfall event that produces ½–inches or more of precipitation. Check the structure integrity and for excessive sediment deposition and replace fill stone as needed.

Clean mud and/or sediment from the roadway and do not allow it to enter the stream.

The structure shall be removed when it is no longer required to provide access to the construction area. During removal, leave stone and geotextile fabric for approaches in place. Place fill over the approaches as part of the stream bank restoration operation.

A temporary culvert crossing should be in place no longer than 24–months.

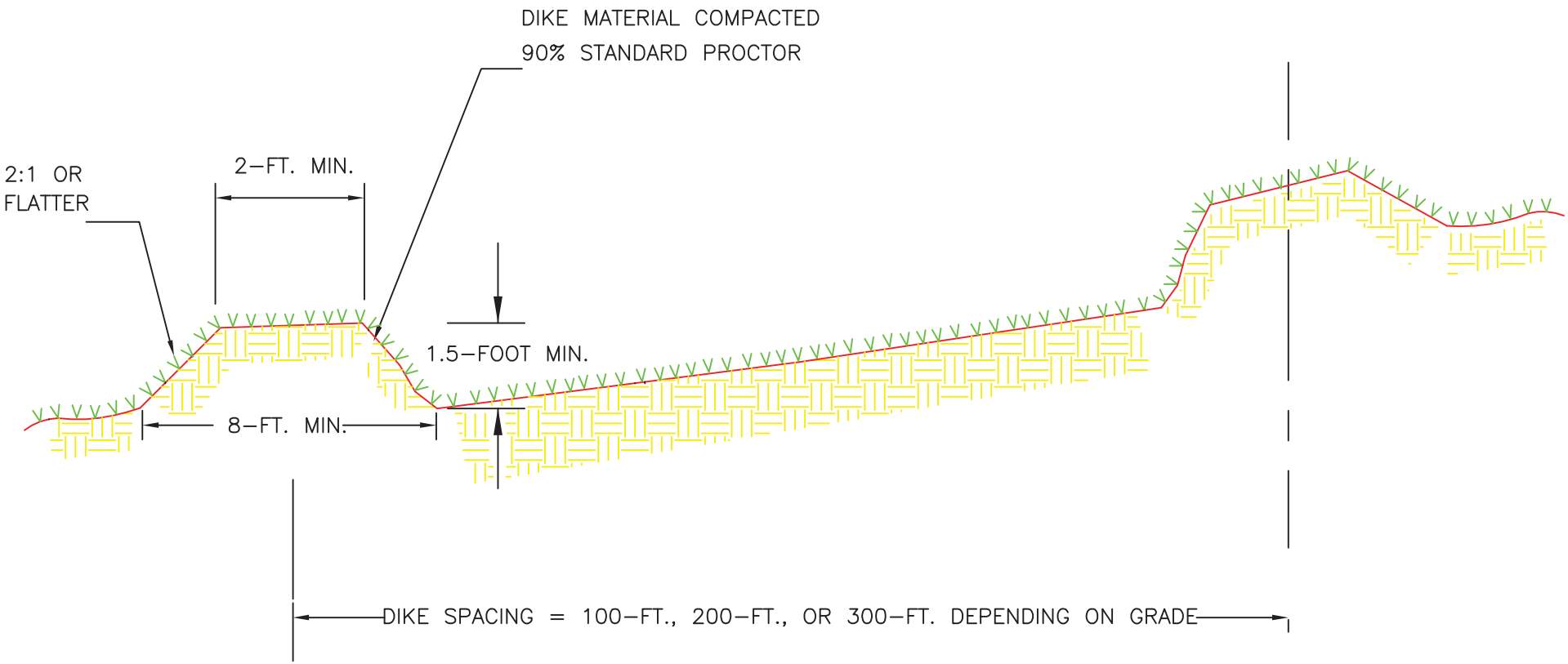

Fort Jackson
Land Disturbance Handbook

DIVERSION DIKE OR BERM

STANDARD DRAWING NO. EC–16 Page 1 of 2

DIVERSION DIKES AND BERMS

Installation

The top width should be a minimum of 2–feet, and the height should be at least 1.5–feet from the upslope toe.

The side slopes should be 2H:1V or flatter.

Grades should be between 0.5% and 1.0%.

Slopes shall be stabilized immediately using vegetation, sod, and erosion control blankets or turf reinforcement mats to prevent erosion.

The upslope side of the dike should provide positive drainage so no erosion occurs at the outlet. Provide energy dissipation measures as necessary. Sediment–laden runoff must be released through a sediment trapping facility.

Sediment–laden runoff shall be directed to a sediment trapping facility.

Minimize construction traffic over diversion dikes and berms.

Inspection and Maintenance:

Dikes and Berms should be inspected, every seven (7) calendar days and within 24–hours after each rainfall event that produces ½–inches or more of precipitation and repairs made as necessary.

Damage caused by construction traffic or other activity must be repaired before the end of each working day.

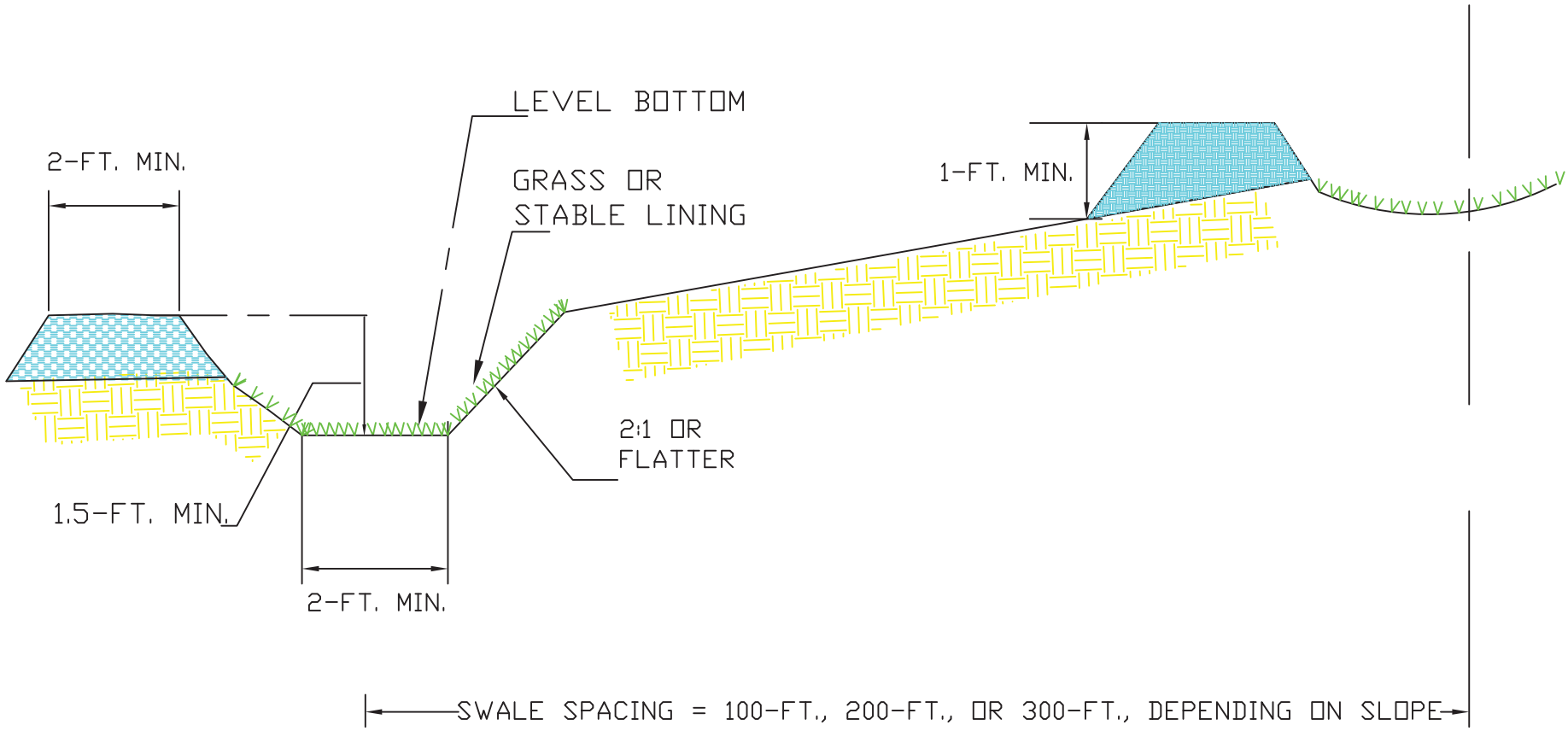

Fort Jackson
Land Disturbance Handbook

DIVERSION SWALE

STANDARD DRAWING NO. EC-17 Page 1 of 2

DIVERSION SWALE

Installation

The bottom width should be a minimum of 2–feet, and the bottom should be level.

The depth should be a minimum of 1.5–feet and the side slopes should be 2H:1V or flatter.

The maximum grade shall be 5%, with positive drainage to a suitable outlet.

Slopes shall be stabilized immediately using vegetation, sod, and erosion control blankets or turf reinforcement mats to prevent erosion.

The upslope side of the swale should provide positive drainage so no erosion occurs at the outlet. Provide energy dissipation measures as necessary.

Sediment–laden runoff shall be directed to a sediment trapping facility.

Inspection and Maintenance:

Swales should be inspected, every seven (7) calendar days and within 24–hours after each rainfall event that produces ½–inches or more of precipitation and repairs made as necessary.

Damage caused by construction traffic or other activity must be repaired before the end of each working day.

SANDBAG AND SANDBAG BARRIER

Installation:

Individual sandbags to be filled as shown. End of sandbag are to be folded over to close, not stiched or sown. Sizes shall are standard Army detail.

Sandbags can be filled with sand, gravel, or other non–toxic or degradable sediments.

Sandbag material to be a non–woven geotextile fabric which meets Fort Jackson specifications.

Sandbag barrier should have a width to height ratio of 3:1. Barrier should be pyramid shaped with no vertical walls.

Bottom level of barrier should be placed in trench with a depth of 120 – 250 mm.

Ends of sandbags to be butted tightly together within barrier.

If waterproofing is desired, run water proofing strip through barrier as shown.

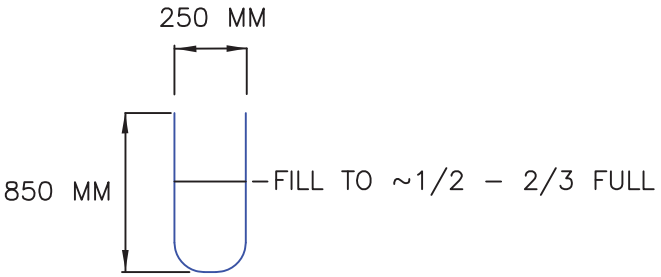

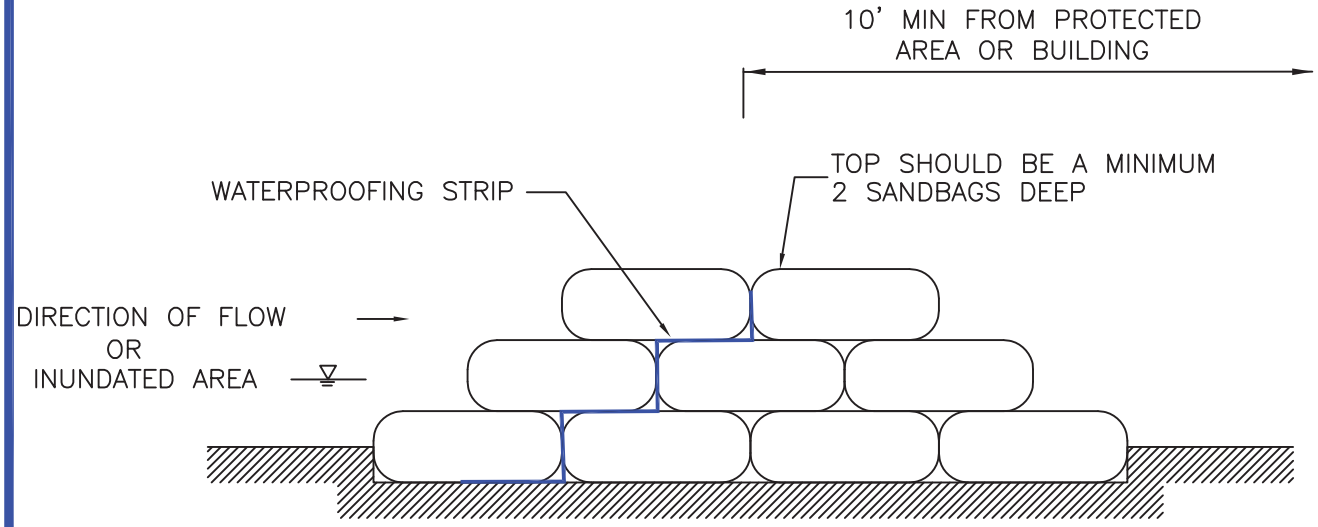

Fort Jackson
Land Disturbance Handbook

SANDBAG DETAILS

STANDARD DRAWING NO. EC–18 Page 1 of 1

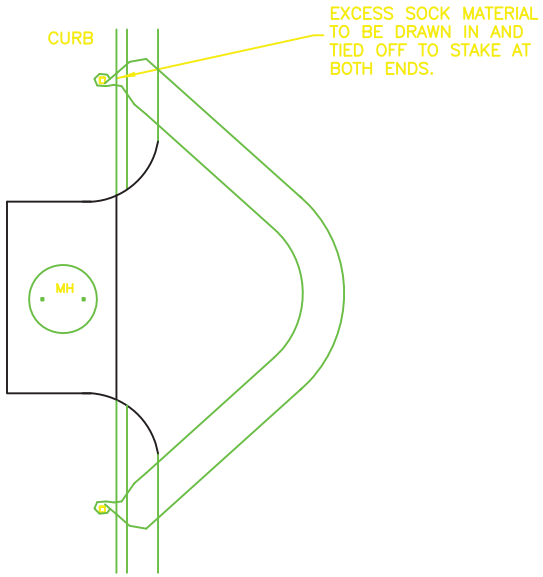

CURB INLET

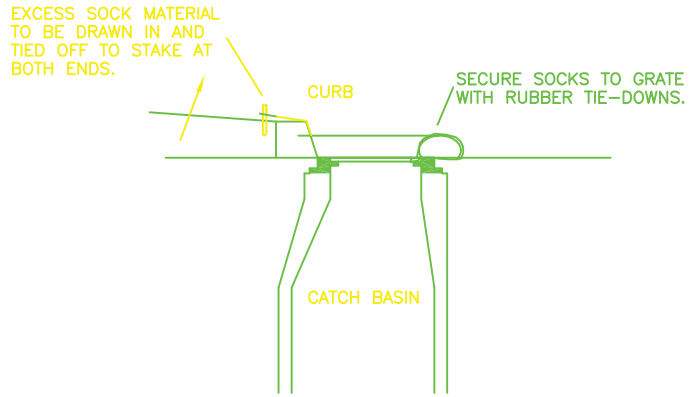

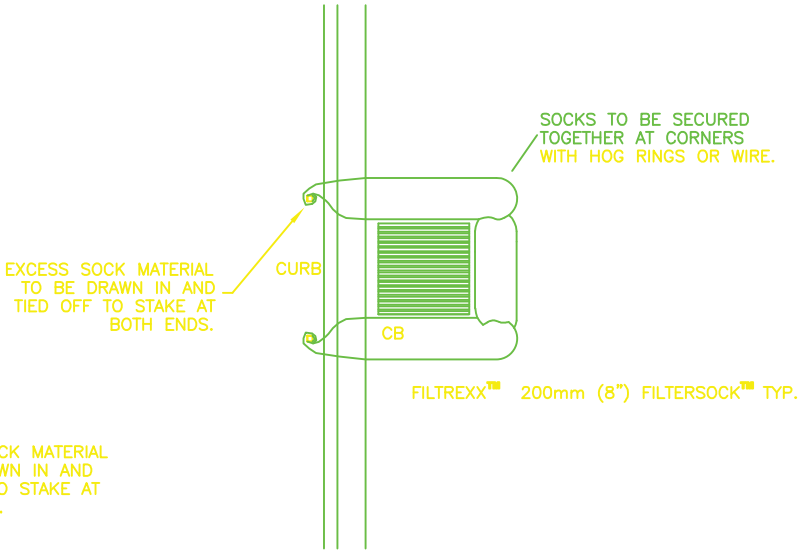

CATCH BASIN OPTION "B"

FOR USE IN TIGHTER AREAS, NARROW ROADS ETC.

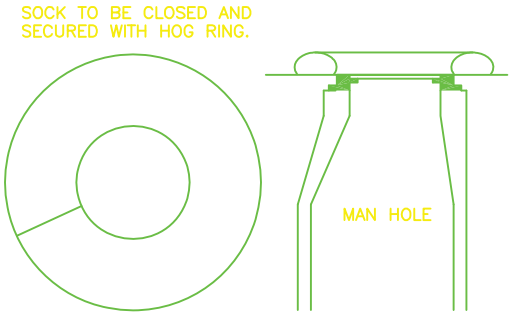

MANHOLE

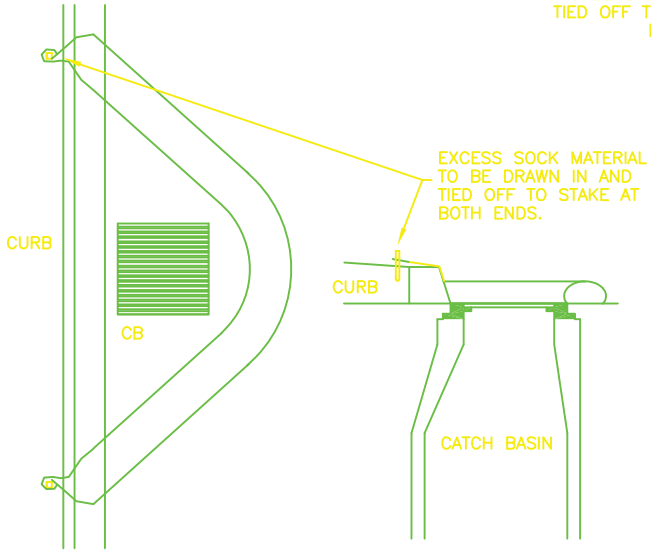

CATCH BASIN OPTION "A"

Fort Jackson
Land Disturbance Handbook

SOCK-TYPE INLET PROTECTION

STANDARD DRAWING NO. EC-19 Page 1 of 2

SOCK INLET PROTECTION

When and Where to Use It

Use as temporary protection during construction of any curb, grate, or yard inlets, manholes, or catch basins

Installation:

Socks should be placed around inlet to prevent sediment from entering storm drain system.

Socks are filled with various materials can vary depending on intended use. Engineer should specify this material or sock manufacturer specification should be used.

Sock should be anchored as specified by manufacturer.

If vegetation is to be integrated into sock, it should be filled with manufacturer approved compost material.

Inspection and Maintenance:

Inspect every seven (7) calendar days and within 24–hours after each rainfall event that produces ½–inches or more of precipitation. Inspect for sediment and debris accumulation. Inspect edges for erosion and repair promptly as required.

Sediment should be removed when it reaches 1/3 the original sock height.

All protection devices should be removed from site within 30 days after construction activities have ceased.

SOCK OPTION:

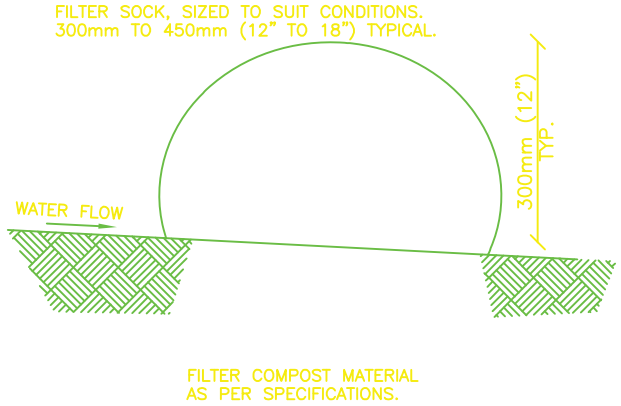

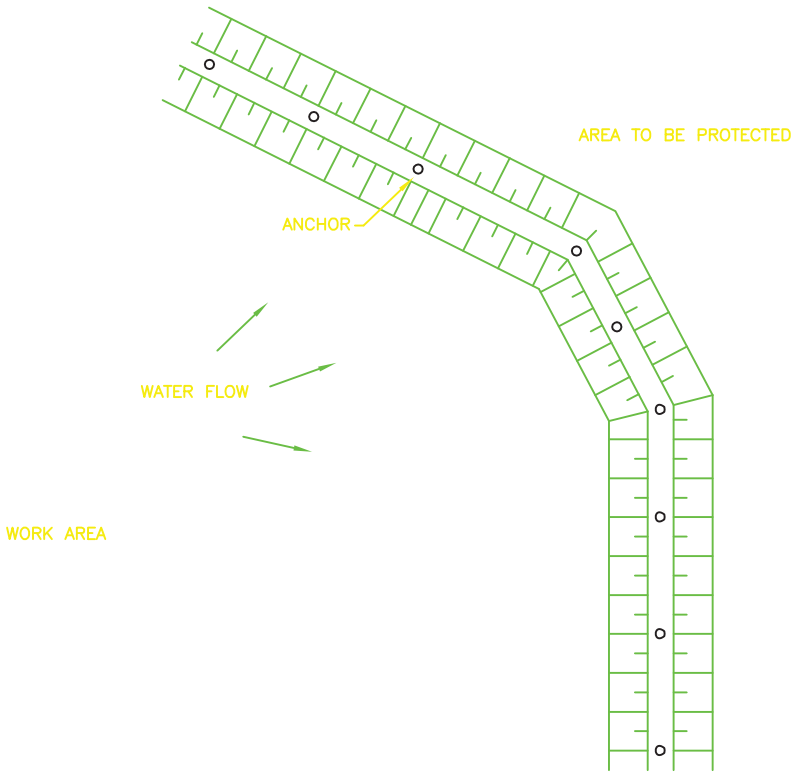

SOCK FENCE

When and Where to Use It

Sock fences are considered equivalent to silt fences and can therefore be used any place or situation where silt fences would be used.

Installation:

Sock fences should be placed on level contours to assist in dissipating sheet flow rather than concentrated flow. The end of the fence should pointing upslope.

Sock fences should be placed a minimum of 5 feet from the toe of slopes.

Sock fence should be anchored as specified by manufacturer.

If vegetation is to be integrated into fence, sock should be filled with manufacturer approved compost material.

Inspection and Maintenance:

Inspect every seven (7) calendar days and within 24–hours after each rainfall event that produces ½–inches or more of precipitation. Inspect for sediment and debris accumulation. Inspect edges for erosion and repair promptly as required.

Sediment should be removed when it reaches 1/3 the original sock height.

All non–permanent fences should be removed from site within 30 days after construction activities have ceased.

Fort Jackson
Land Disturbance Handbook

SOCK FENCE

STANDARD DRAWING NO. EC–20 Page 1 of 1